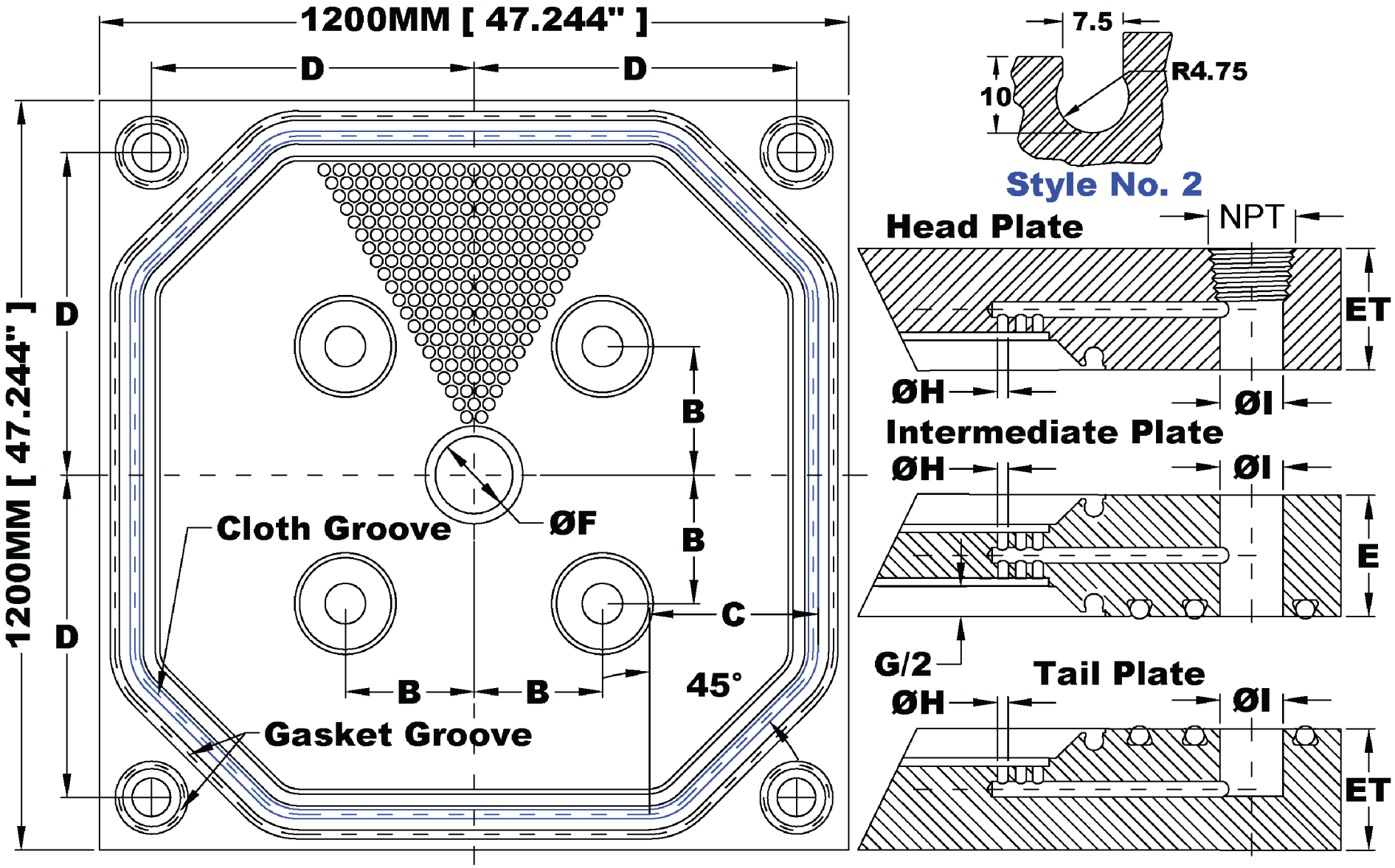

Reference						
B (Stay Boss Loc.) 175mm	C (Corner Pad) 158.619mm	D (Discharge Hole Loc.) *Choose in Dropdown	E (Plate Thickness) Web + Cake	ET (End Plt Thickness) Web + (Cake/2)	F (Feed Hole Dia.) 152.4mm	H (Down Porting) 8mm
I (Discharge Dia.) 50.8mm	G/2 (Filter Cake)					